< 1-12-1-1-2_xx_ANT > RDK

Rev_0.3

ANT #1 (GSM_LB, B5/B8/B13/B17/B20/B28/B7)

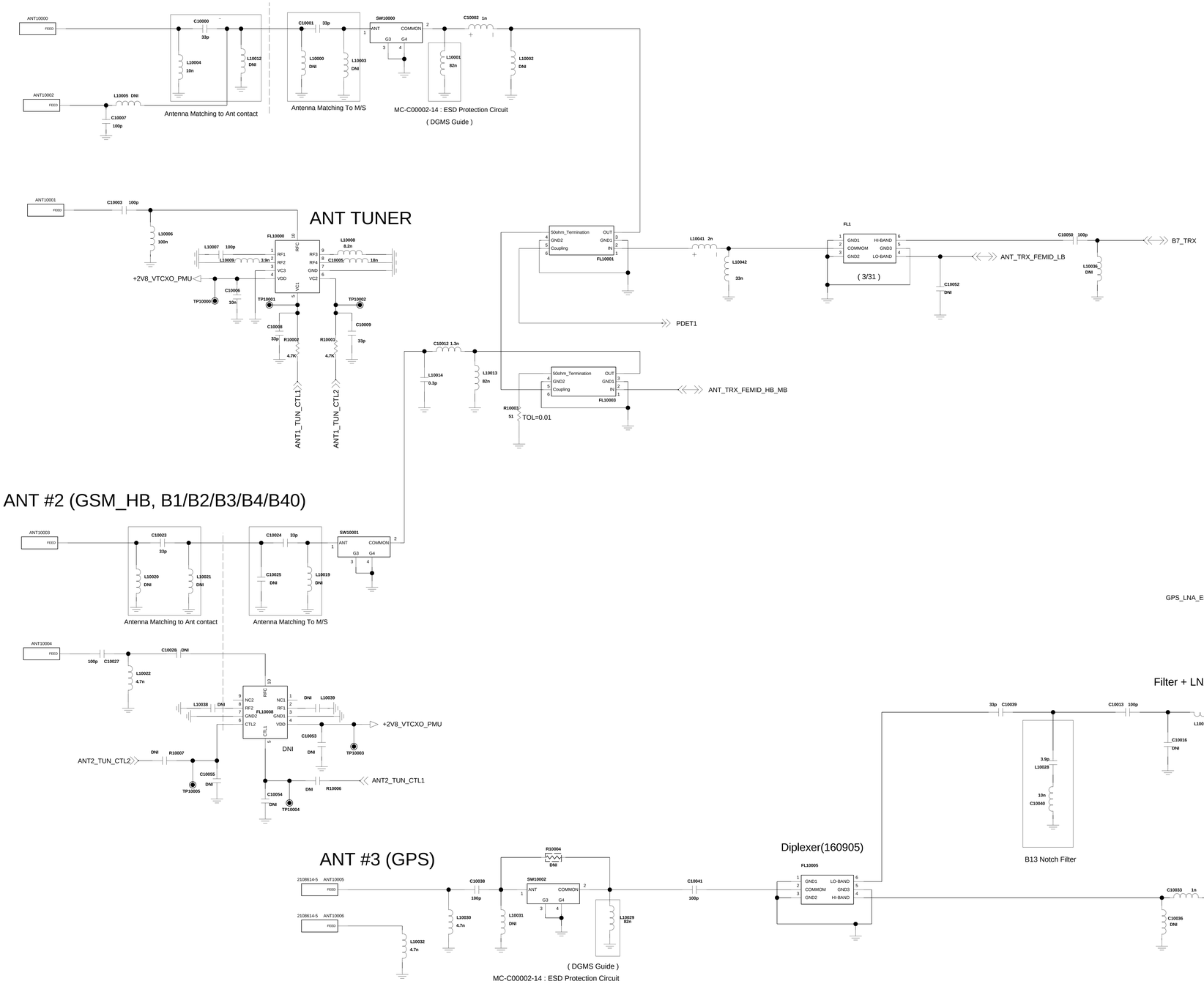

ANT #2 (GSM_HB, B1/B2/B3/B4/B40)

ANT #3 (GPS)

Filter + LNA Type

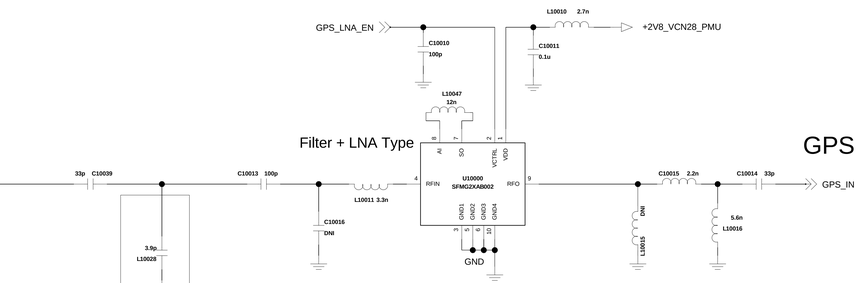

B7 DRX

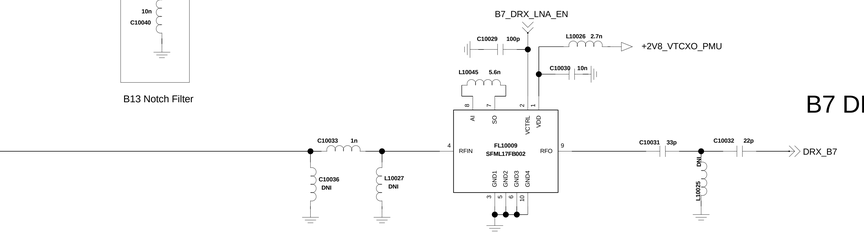

B13 Notch Filter

DRX B40 move from ANT #3 to ANT #4

LG Electronics

TITLE: Schematic1

SIZE: A2 | DWG NO: PDM NUMBER | REV: Rev

SHEET: 1-1_ANT 18 | Date: Drawing Date | DRAWN BY: User Name

LGE Internal Use Only

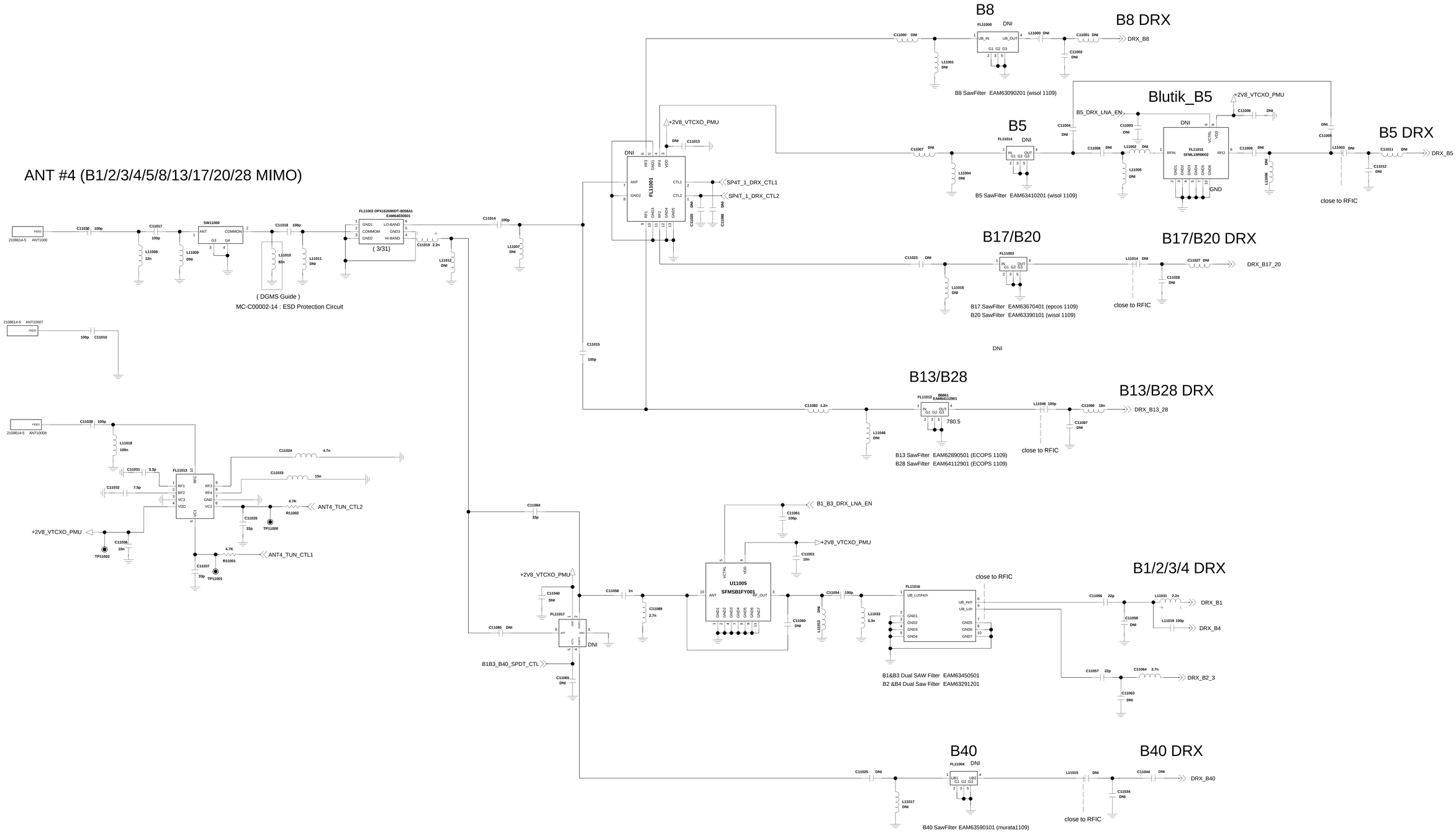

LG Electronics

TITLE: Schematic1

SIZE: A2 | DWG NO: PDM NUMBER | REV: Rev

DRAWN BY: User Name | SHEET: 1-2_ANT_DRX | Date: Drawing Date

LGE Internal Use Only

uFEMID

ºÏ¹ÌÇã SAW Front End Module(D5322) EAT63414801
B4/5/8 duplexer
G1800,TX2G LPF

GlobalÇã SAW Front End Module(D5323)EAT63375201
B1/3/5/8 duplexer

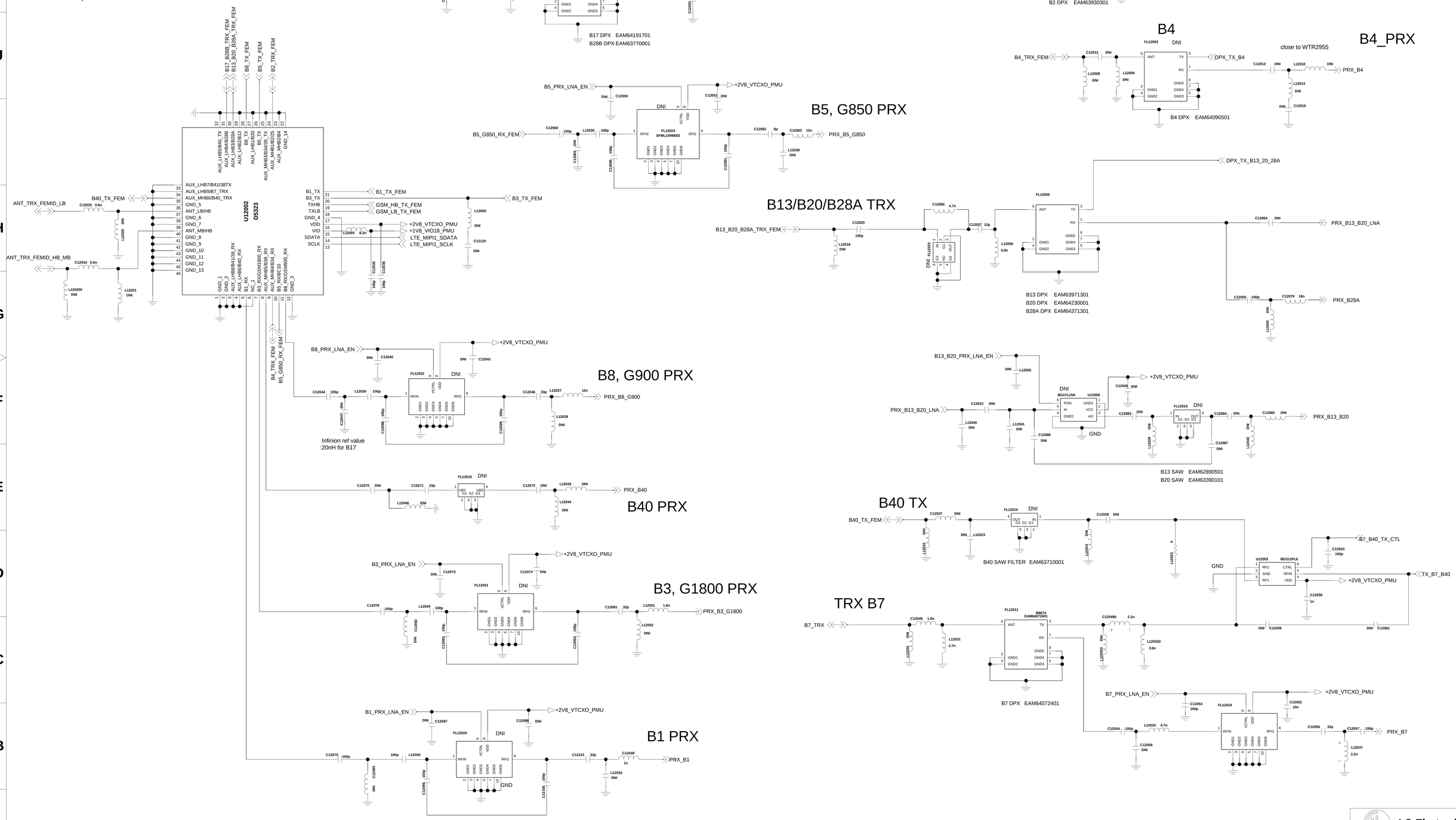

LG Electronics

TITLE MODEL NAME

SIZE A2 | DWG NO PDM NUMBER | REV Rev

DRAWN BY User Name | SHEET 1 OF 18 | Date Drawing Date

LGE Internal Use Only

MMPA2.0

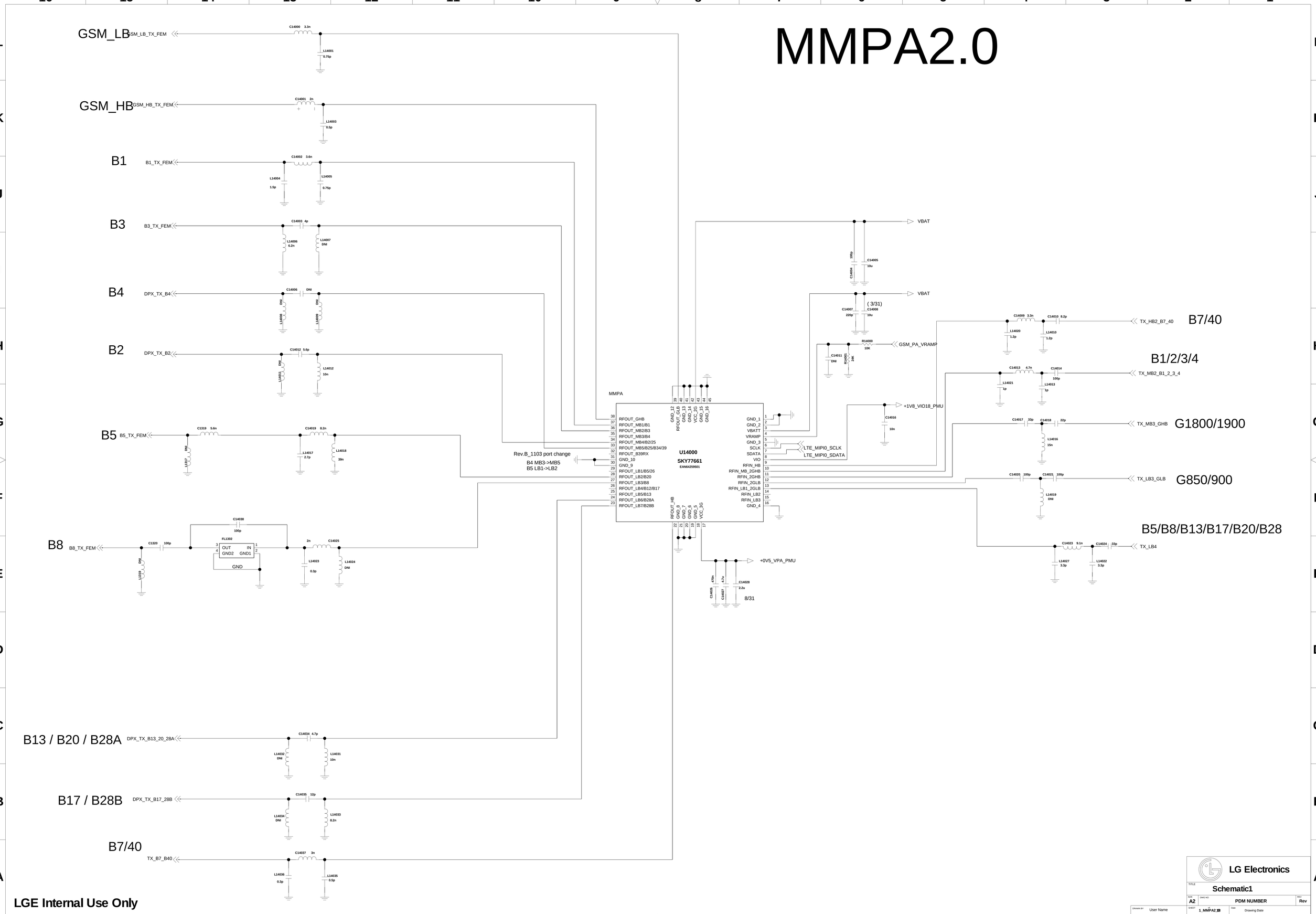

LGE Internal Use Only

LG Electronics

TITLE: Schematic1

SIZE: A2 | DWG NO: PDM NUMBER | REV: Rev

DRAWN BY: User Name | SHEET: 1_MMPA2.0 | Date: Drawing Date

< 1-X MT6176 RFIC > RDK

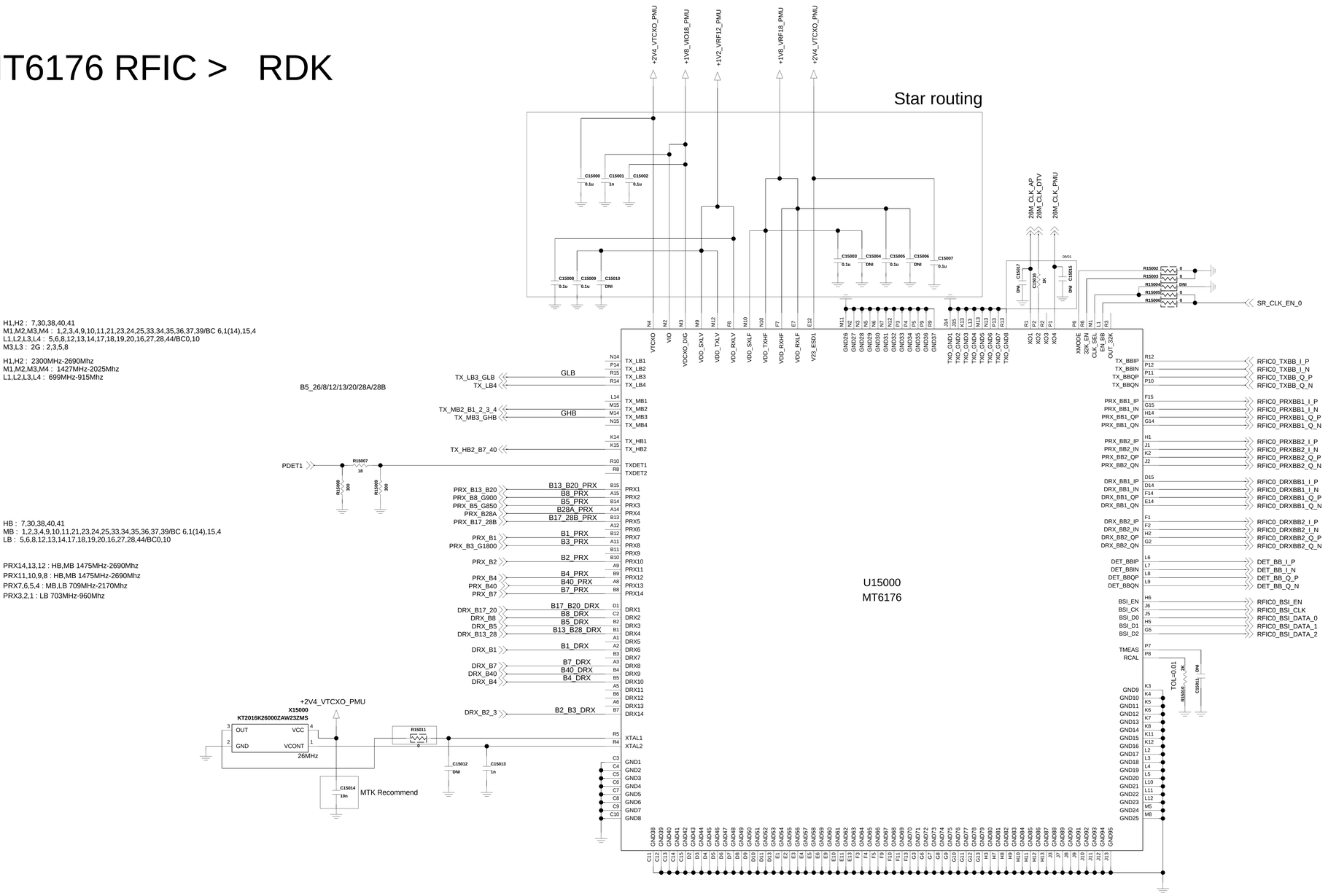

LGE Internal Use Only

LG Electronics

TITLE: Schematic1

SIZE: A2 | DWG NO: PDM NUMBER | REV: Rev

DRAWN BY: User Name | SHEET 25 OF 20 | Date: Drawing Date

NFC

NFC Antenna

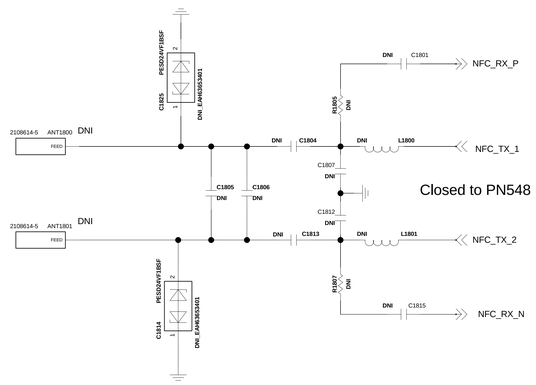

PN548 _main

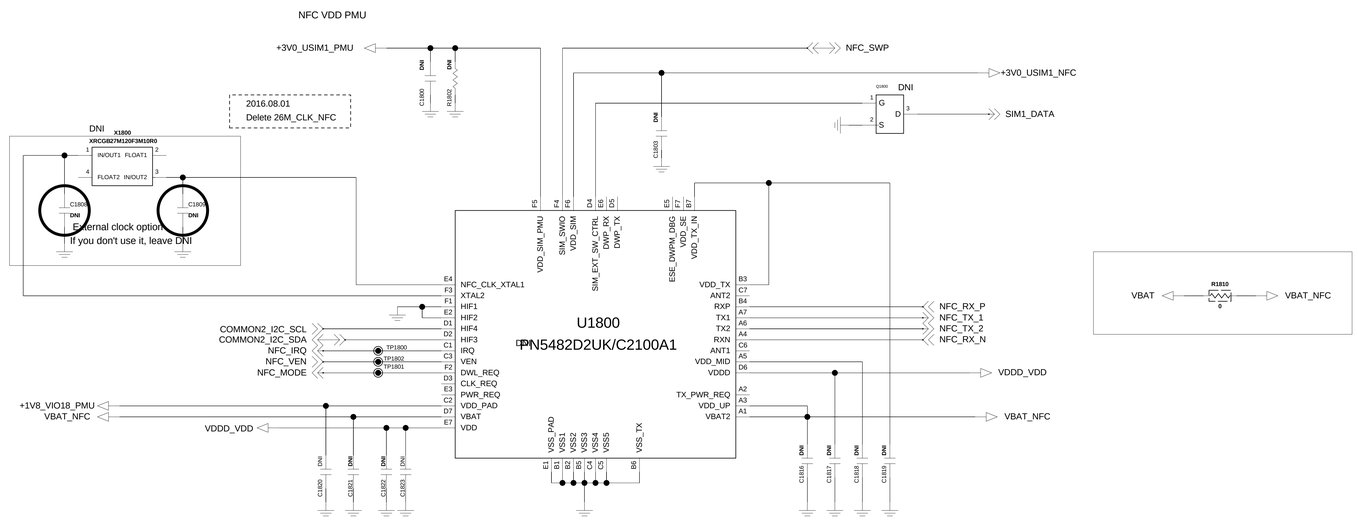

LGE Internal Use Only

LG Electronics	
TITLE	Schematic1
SIZE A2	DWG NO PDM NUMBER
REV Rev	
DRAWN BY User Name	SHEET 1_8_PN548
Date Drawing Date	

< 2-1_MT6750_DATA >

PCB Rev 1.0

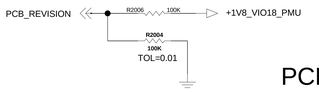

PCB_Revision

0	100K	20K	0.300
0_1	100K	27K	0.383
A	100K	39K	0.505
B	100K	51K	0.608
C	100K	75K	0.771
1.0	100K	100K	0.900
1.1	100K	130K	1.017

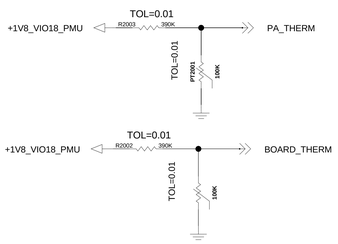

RFIC

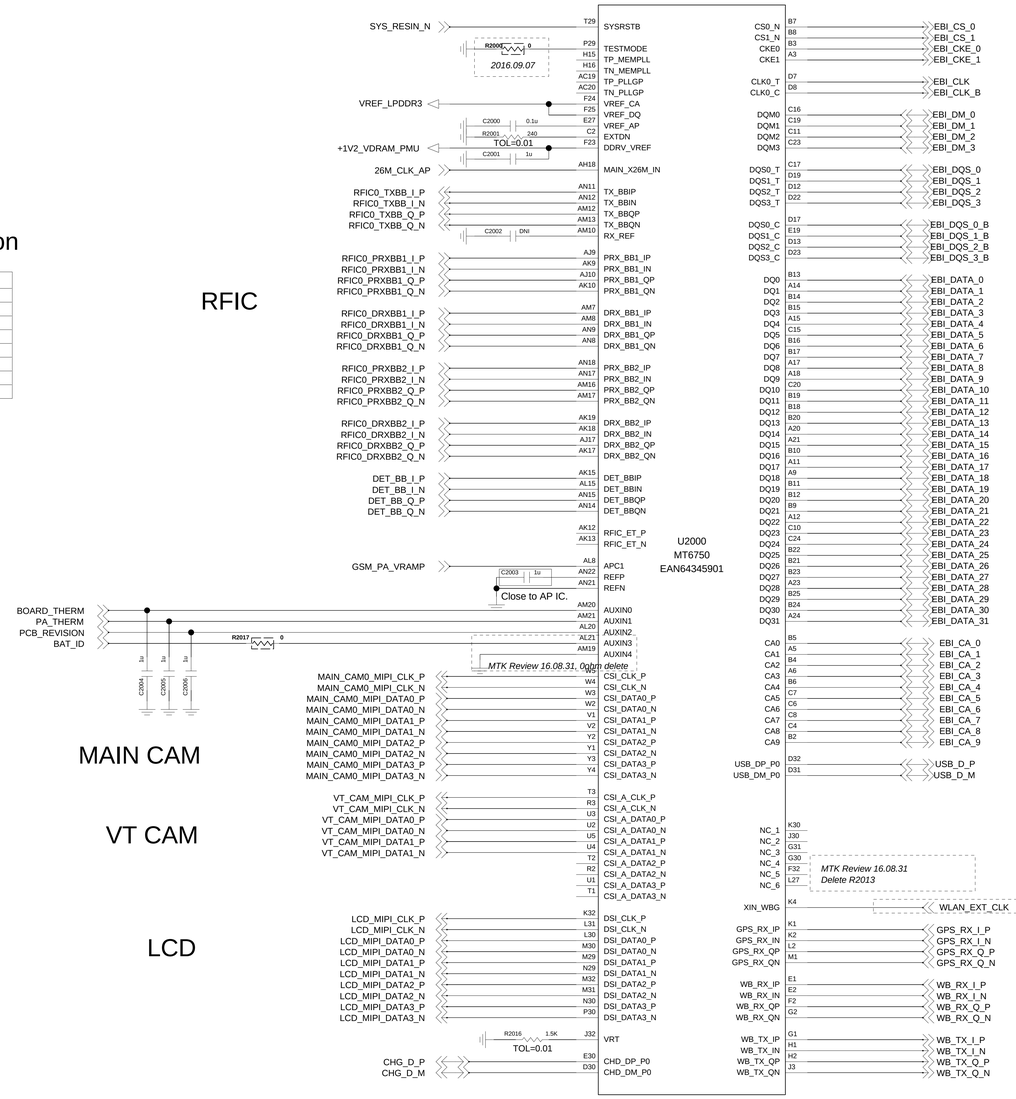

MCP(LPDDR)

USB D

VT CAM

LCD

Default resistor of "SSUSB_VRT" can be NC
if internal USB VRT is applied.

CONNECTIVITY

LGE Internal Use Only

LG Electronics

TITLE: Schematic1

SIZE	DWG NO	REV
A2	PDM NUMBER	Rev

DRAWN BY: User Name | SHEET: 2-1_MT6750_DATA | Date: Drawing Date

< 2-1_MT6750_GPIO >

MTK Review
RAM Dump Key Function possible that ther is DRAM latch Issue

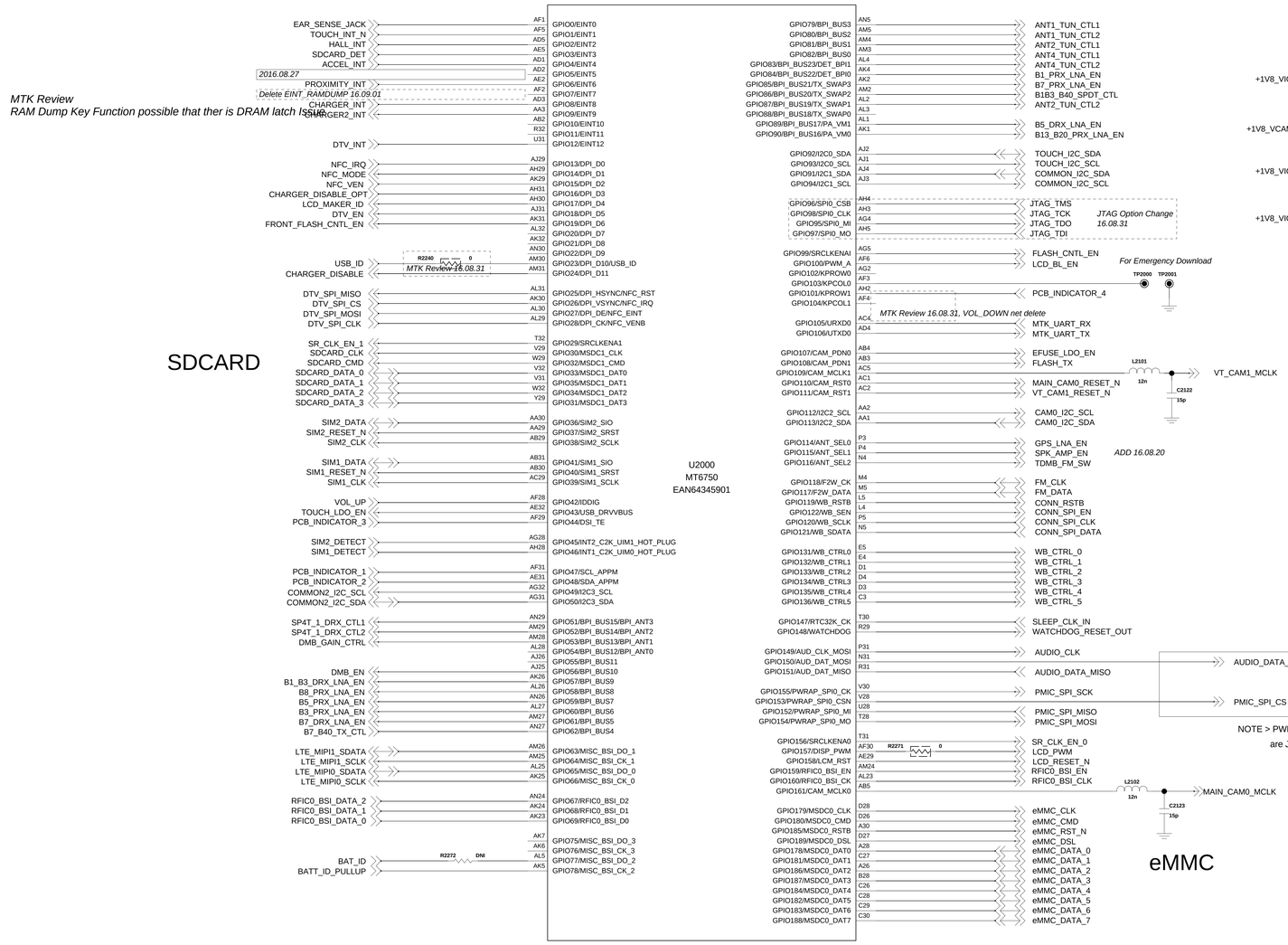

eMMC

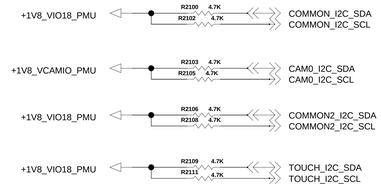

COMMON_I2C : DSV_BACKLIGHT_FLASH(LM3632A), SENSORS
Slave Charger BQ25898C

CAM0_I2C : MAIN / VT CAMERA

COMMON2_I2C : CHARGER SM5424, NFC

TOUCH_I2C : TOUCH

[JTAG]

Sync. LV5

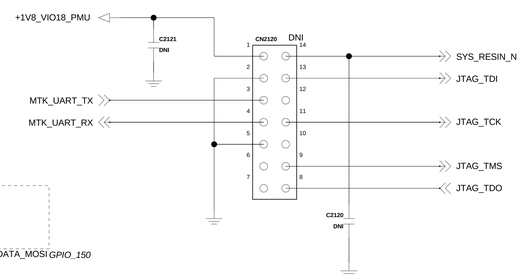

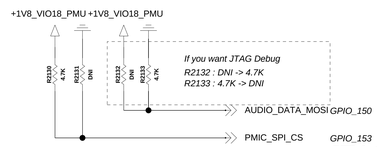

JTAG Option

NOTE >

LV7 JTAG Option

NOTE > PWRAP_SPI0_CSN and AUD_DAT_MOSI are JTAG feature in bootstrap.

GPIO153(PMI_SPI_CS)	GPIO150(Audio_DATA_MOSI)	
HI	LOW	NA
HI	HI	SPI_CSB/SPI_CLK/SPI_MO/SPI_MI
LOW	LOW	CAM_CLK0/CAM_RST0/CAM_RST1/CAM_PDN0
LOW	HI	MSDC1_CLK/MSDC_CMD/MSDC1_DAT0/MSDC1_DAT1

PCB INDICATOR

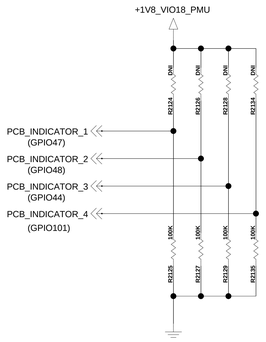

	M320tv	M320n	M320	M320F	M320AR	M320H	M320dsn	M320Y	M320YK	M320K	MX320L	MX320S	MX320K	TBD1	TBD2
PCB_INDICATOR_1	L	H	L	H	L	H	L	H	L	H	L	H	L	H	L
PCB_INDICATOR_2	L	L	H	H	L	L	H	H	L	L	H	H	L	L	H
PCB_INDICATOR_3	L	L	L	L	H	H	H	H	L	L	L	L	H	H	H
PCB_INDICATOR_4	L	L	L	L	L	L	L	L	H	H	H	H	H	H	H
	0	1	2	3	4	5	6	7	8	9	10	11	12	13	14

MODEL INDICATOR

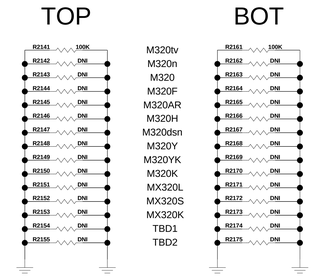

LGE Internal Use Only

	LG Electronics
TITLE	Schematic1
SIZE A2	DWG NO PDM NUMBER
Rev	
SHEET 2-1_MT6750_GPIO	Date Drawing Date
DRAWN BY User Name	

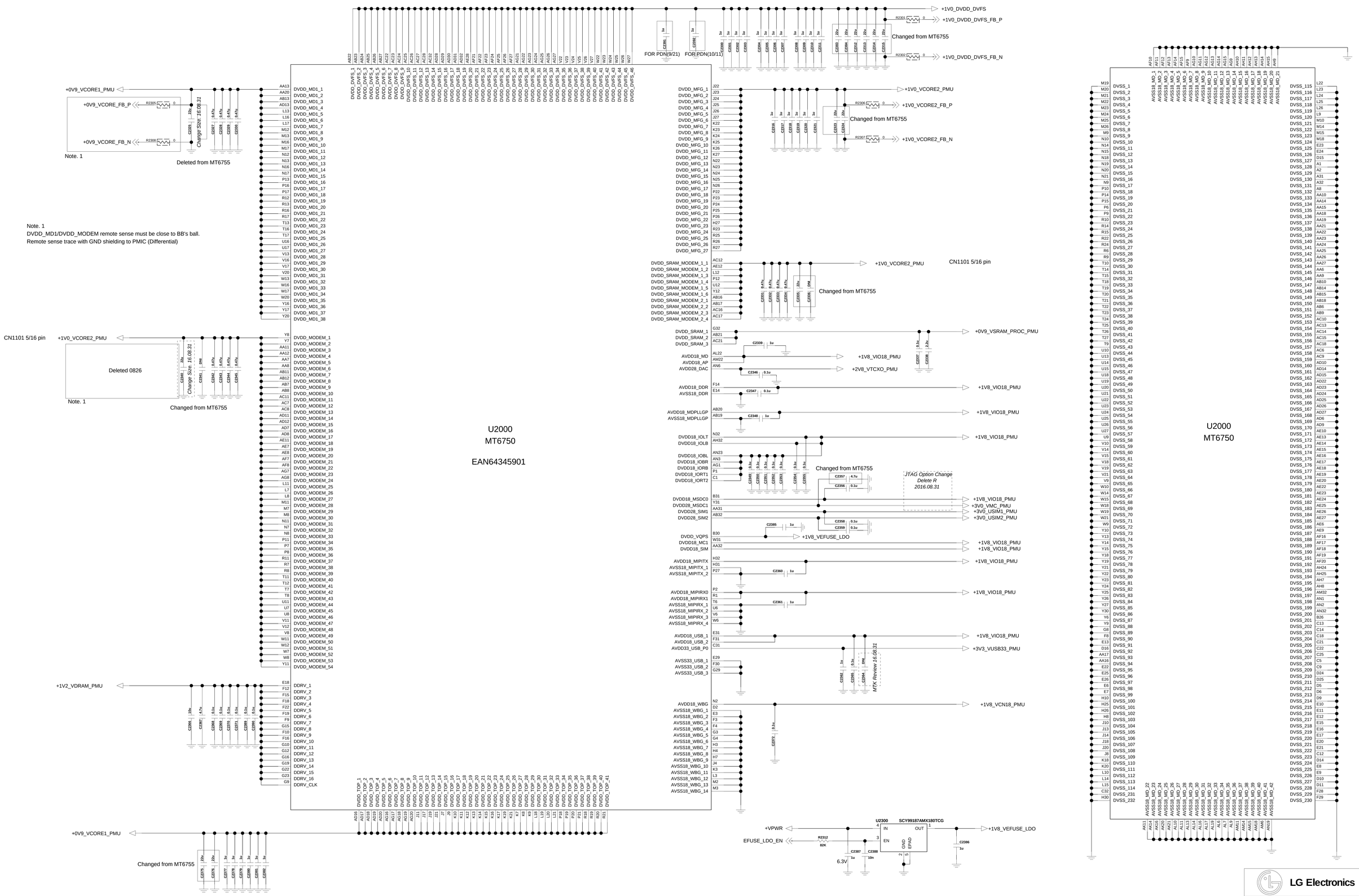

LGE Internal Use Only

LG Electronics

Schematic1

SIZE A2	DWG NO PDM NUMBER	REV Rev
DRAWN BY User Name	SHEET 2-1_MT6750_POWER_GND	Drawing Date

< MCP_eMMC_5_0_16Gb_DDR3_16GB_eMMC Hynix >

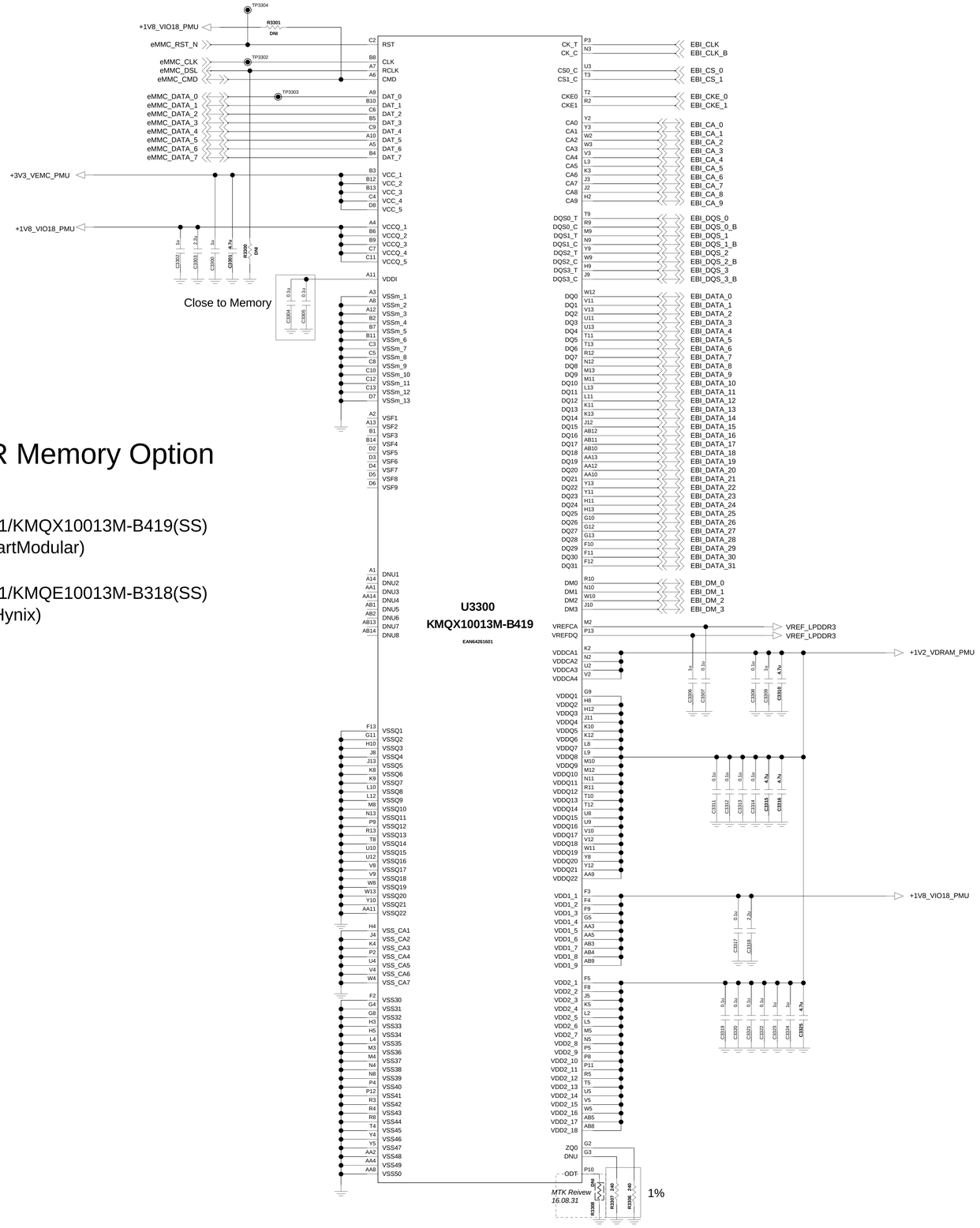

LV7 Global/KOR Memory Option

1. Brazil(2GB/32GB)
   1st : EAN64261601/KMQX10013M-B419(SS)
   PPB : Not Yet(SmartModular)
2. All(2GB/16GB)
   1st : EAN64254101/KMQE10013M-B318(SS)
   2nd : Not Yet(SK Hynix)

32GBYTE 1.7VTO1.95V,2.7VTO3.6V,1.14VTO1.3V 11.5x13.0x1.0 TRAY 221P NAND+DDR SDRAM FBGA 32GB eMMC v5.1+16Gb LPDDR3 MCP (14nm 128Gb MLC + 20nm 8Gb 933MHz LPDDR3)

LGE Internal Use Only

LG Electronics

TITLE	Schematic1
SIZE	A2
DWG NO	PDM NUMBER
REV	Rev
DRAWN BY	User Name
SHEET	3-3_MCP_eMMC_5_0_16Gb_DDR3_16GB_HYNIX

<4-1-15-1_PMIC_MT6353_DATA >

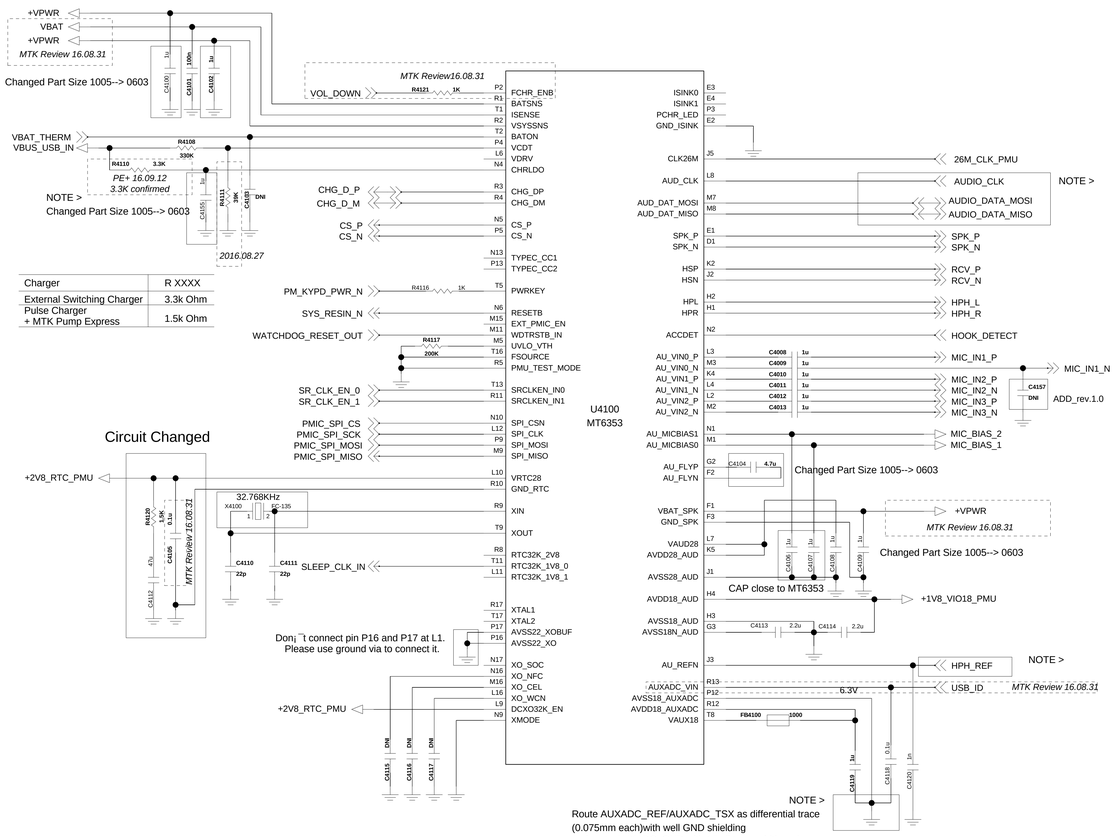

Charger	R XXXX
External Switching Charger	3.3k Ohm
Pulse Charger + MTK Pump Express	1.5k Ohm

<4-1-15-1_PMIC_MT6353_POWER > Rev_0.1

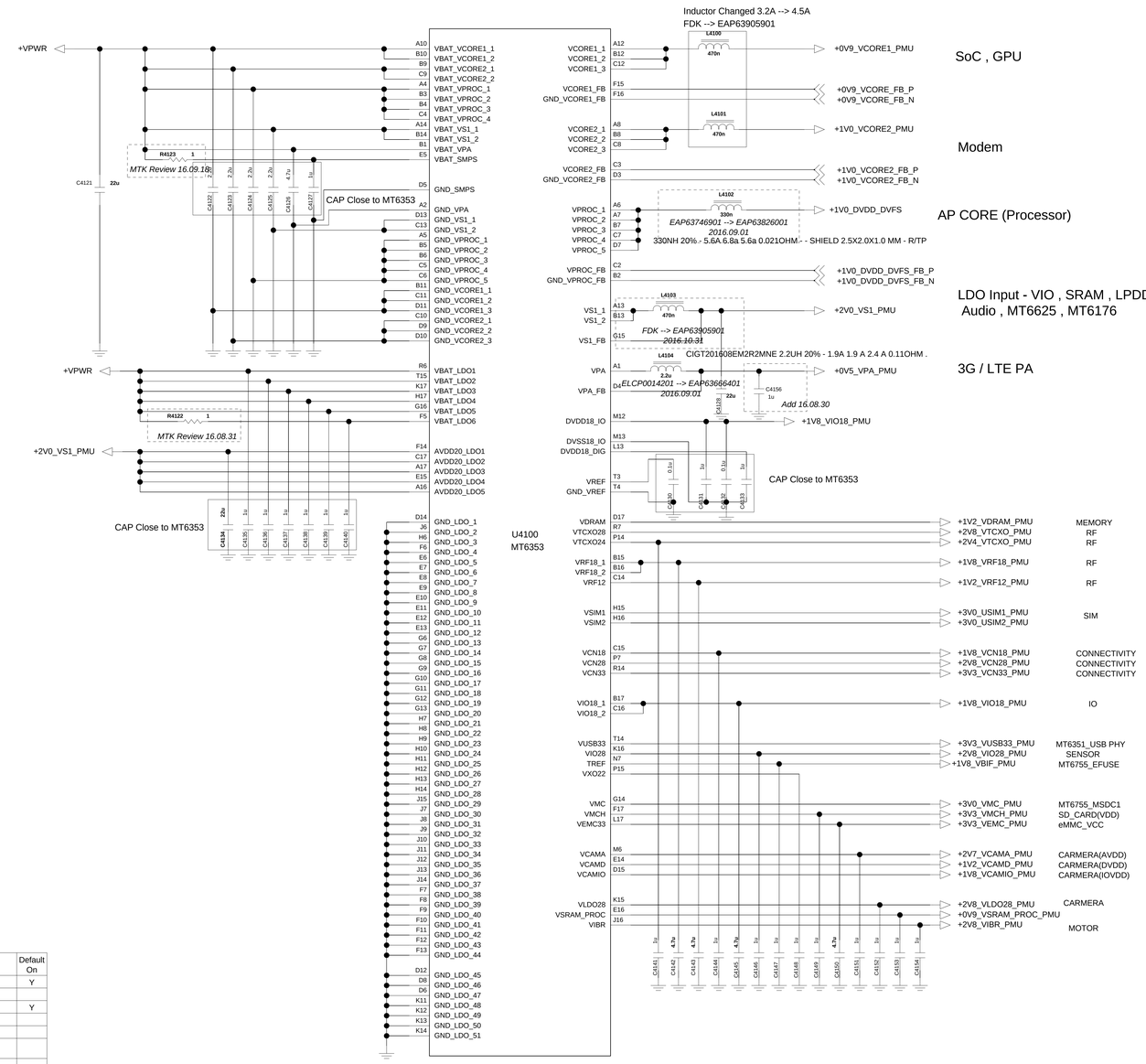

BUCK & LDO

Function	Default Voltage	Vout	Voltage Step [mV]	Rated Current	Default On
VCORE1	0.9V	0.600 - 1.310 V	6.25	3,000mA	Y
VCORE2	1.0V	0.600 - 1.310 V	6.25	3,500mA	Y
VPROC	1.0V	0.600 - 1.310 V	6.25	5,000mA	Y
VS1	2.0V	1.950 - 2.200 V	12.5	1,900mA	Y
VPA	0.5V	0.500 - 3.400 V	50	800mA	N

Function	Type	Input Power Domain	Default Voltage	Vout	Rated Current	Default On
VDRAM	SLDO	AVDD20_LDO1	1.24 V	1.24 V	1,000mA	Y
VTCXO28	ALDO	VBAT_LDOS1	2.8 V	2.8 V	40mA	
VTCXO24	ALDO	VBAT_LDOS2	2.375 V	2.375 V	40mA	Y
VRF18	SLDO	AVDD20_LDO5	1.825 V	1.825 V	400mA	
VRF12	SLDO	AVDD20_LDO5	1.2 V	1.2 V	150mA	
VSIM1	DLDO	VBAT_LDO4	1.8 V	1.7 / 1.8 / 1.86 / 2.76 / 3.0 / 3.1 V	50mA	
VSIM2	DLDO	VBAT_LDO4	1.8 V	1.7 / 1.8 / 1.86 / 2.76 / 3.0 / 3.1 V	50mA	
VCN18	SLDO	AVDD20_LDO2	1.8 V	1.8 V	150mA	
VCN28	ALDO	VBAT_LDO1	2.8 V	2.8 V	40mA	
VCN33	DLDO	VBAT_LDO2	3.3 V	3.3 / 3.4 / 3.5 / 3.6 V	350mA	
VIO18	SLDO	AVDD20_LDO3	1.8 V	1.8 V	600mA	Y
VUSB33	DLDO	VBAT_LDO2	3.3 V	3.3 V	50mA	Y
VIO28	DLDO	VBAT_LDO4	2.8 V	2.8 V	200mA	Y
VREF	Power Switch	VBAT_LDO1	1.8 V	1.8 V	1mA	
VXO22	ALDO	VBAT_LDOS2	2.2 V	2.2 V	20mA	Y
VMC	DLDO	VBAT_LDO5	3.0 V	1.8 / 2.9 / 3.0 / 3.3 V	200mA	
VMCH	DLDO	VBAT_LDO5	3.0 V	2.9 / 3.0 / 3.3 V	800mA	
VEMC33	DLDO	VBAT_LDO3	3.0 V	2.9 / 3.0 / 3.3 V	800mA	Y
VCAMA	ALDO	VBAT_LDO1	2.8 V	2.5 / 2.8 V	200mA	
VCAMD	SLDO	AVDD20_LDO2	1.3 V	0.9 / 1.0 / 1.1 / 1,22 1.3 / 1.5 / 1.8 V	<=1.5V : 500mA 1.8V : 300mA	
VCAMIO	SLDO	AVDD20_LDO2	1.8 V	1.8 V	200mA	
VLDO28	DLDO	VBAT_LDO4	2.8 V	2.8 V	300mA	
VSRAM_PROC	SLDO	AVDD20_LDO4	1.1 V	0.6 - 1.31 V	400mA	Y
VIBR	DLDO	VBAT_LDO4	2.8 V	1.2 / 1.3 / 1.5 / 1.8 2.5 / 2.8 / 3.0 / 3.3 V	100mA	
VAUX18	ALDO	VBAT_LDO1	1.8 V	1.8 V	40mA	Y
VAUD28	ALDO	VBAT_LDO1	2.8 V	2.8 V	40mA	Y
VRTC28	VRTC28	VBAT_LDO1	2.8 V	2.8 V	2mA	Y
VDIG18	DVDD18_DIG	VBAT_LDO2	1.8 V	1.8 V	20mA	Y

LGE Internal Use Only

LG Electronics

TITLE: Schematic1

SIZE	DWG NO	REV
A2	PDM NUMBER	Rev

SHEET 20 of 20 | DRAWN BY: User Name | Date: Drawing Date

< Parallel Charging - SM5424 >

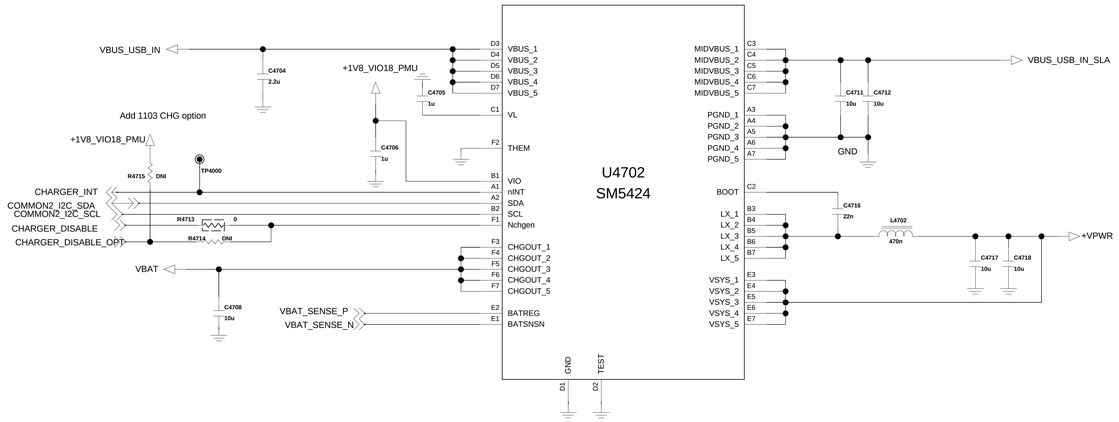

< SLAVE CHARGER bq25898s >

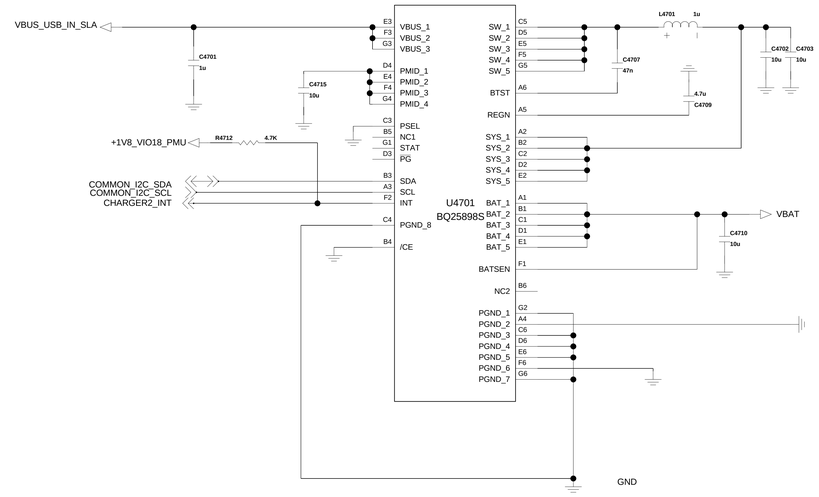

LGE Internal Use Only

	LG Electronics
TITLE	Schematic1
SIZE A2	DWG NO PDM NUMBER
	REV Rev
DRAWN BY User Name	SHEET 4-2_CHARGER
	Date Drawing Date

<5-1-1-18_MT6625L_WiFi_BT_GPS_FM>

Rev_0.3

ANT (BT, WiFi)

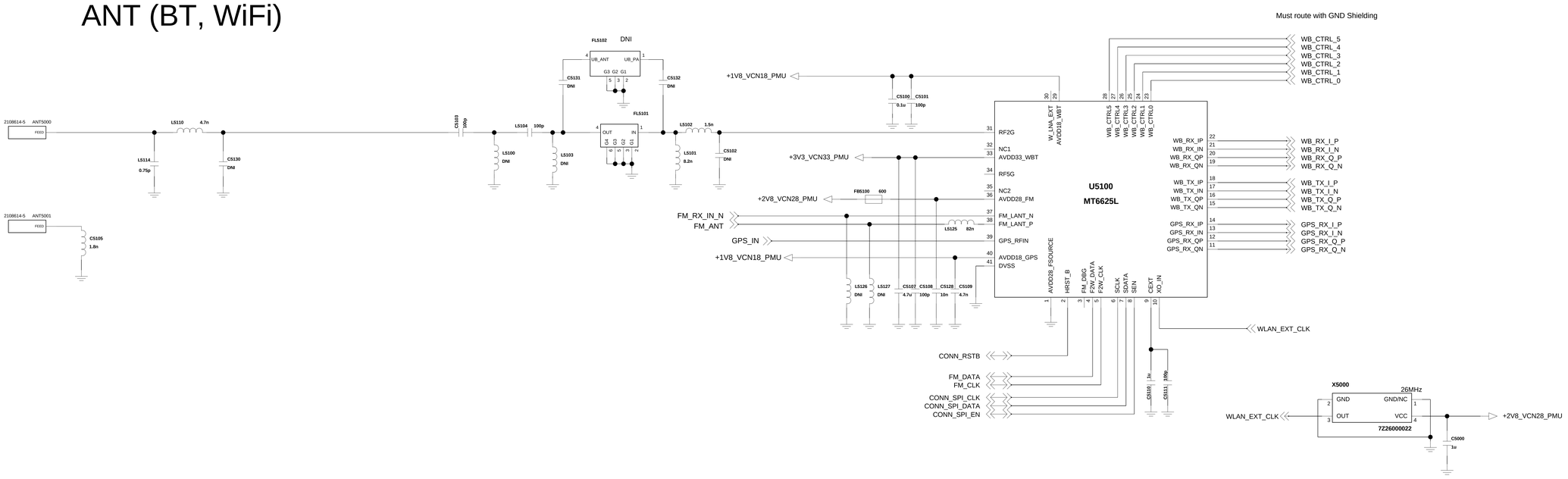

LGE Internal Use Only

LG Electronics

TITLE: Schematic1

SIZE	DWG NO	REV
A2	PDM NUMBER	Rev

DRAWN BY: User Name

SHEET: 5-1_BT_WiFi_GPS_MT6625L

DATE: Drawing Date

TDMB_1SEG Swap circuit

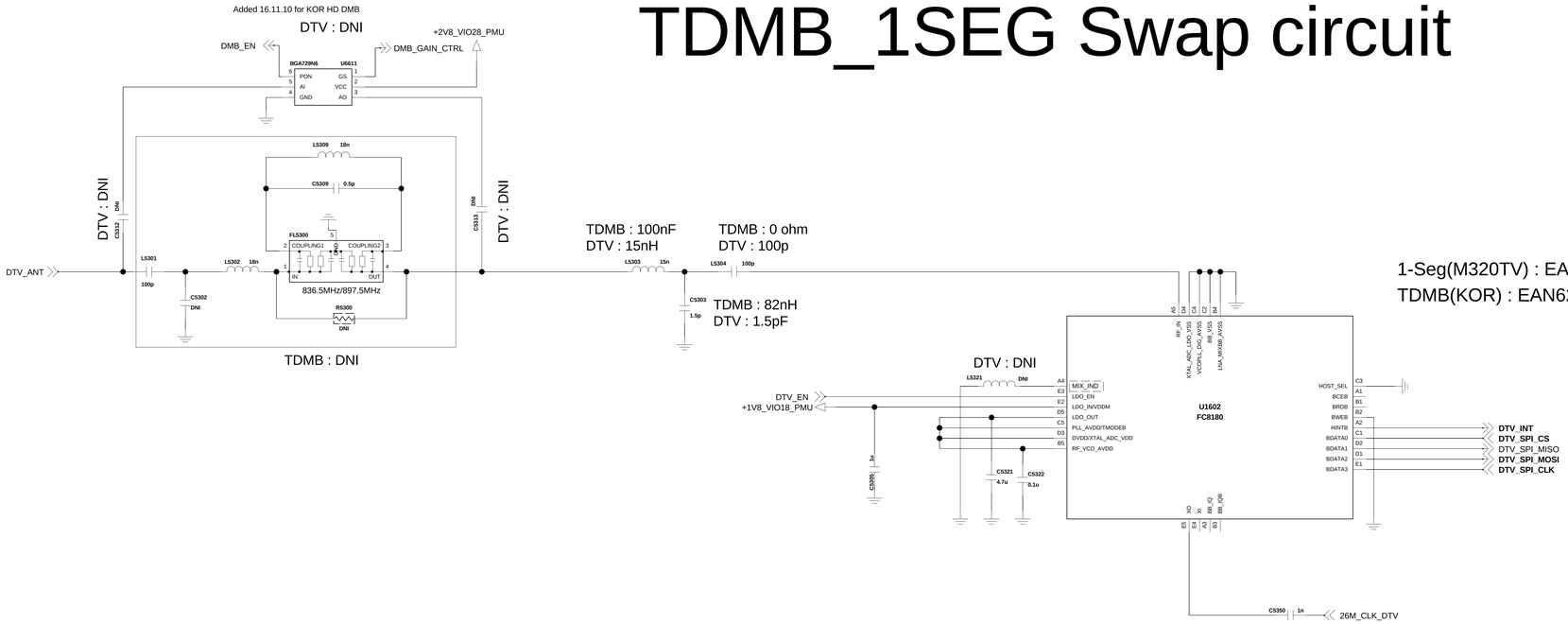

1-Seg(M320TV) : EAN63567401(FC8180) using option2 Library
TDMB(KOR) : EAN62909201(FC8080)

LGE Internal Use Only

LG Electronics

TITLE: Schematic1

SIZE: A2 | DWG NO: PDM NUMBER | REV: Rev

DRAWN BY: User Name | SHEET: 5-3-1-3_DTV8 | Date: Drawing Date

< SPK AMP >

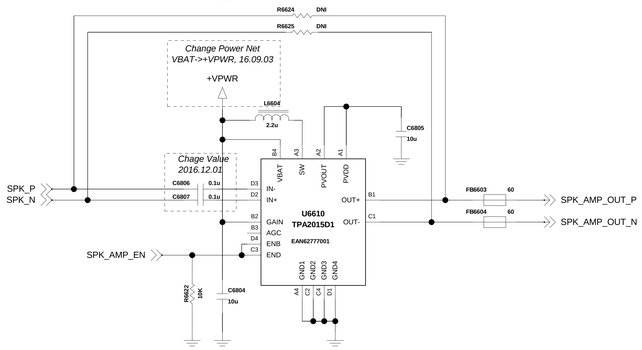

< 6-6-1_Earjack >

Rev_0.6

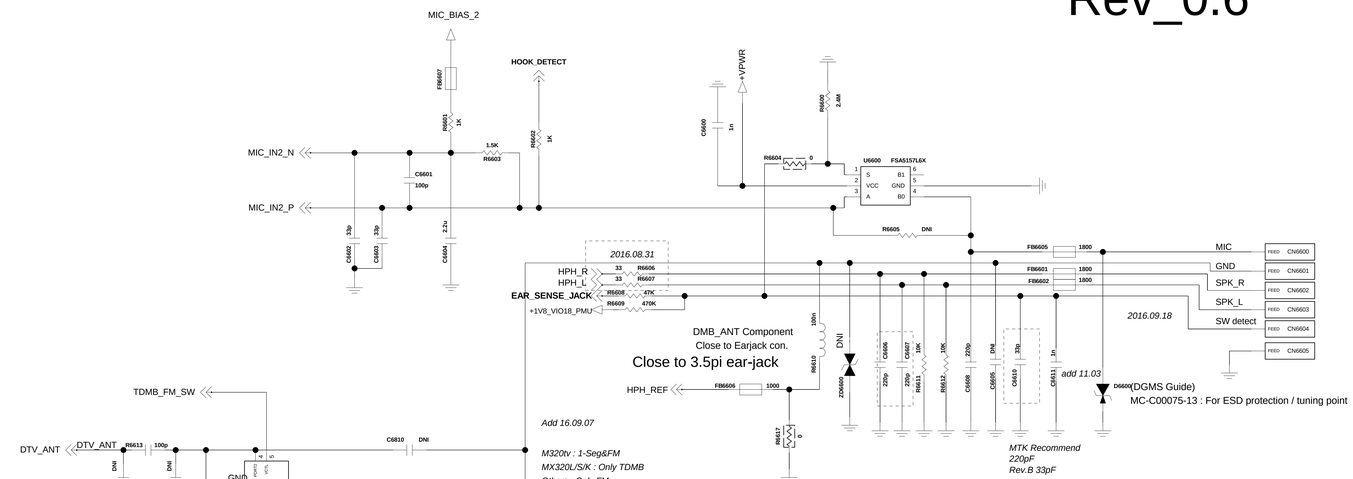

< 6-7-1_Speaker >

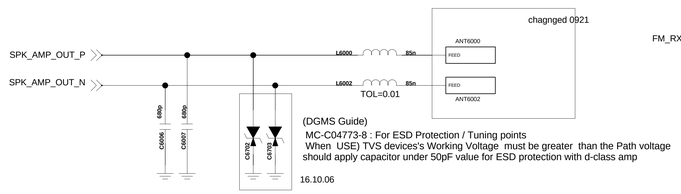

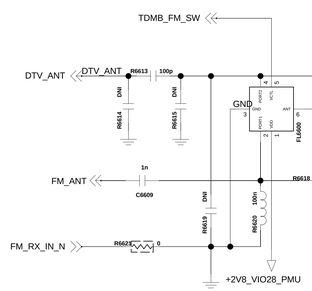

< 6-9-2_2MIC >

Main MIC

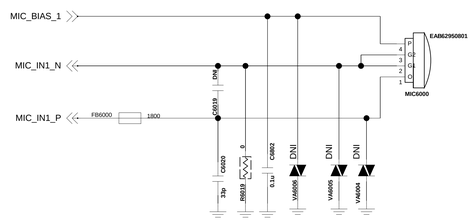

Sub_MIC

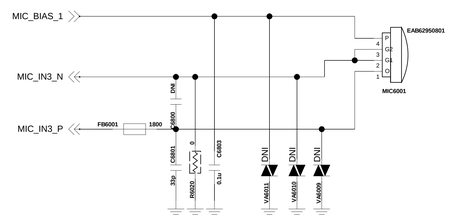

< 6-8-2_Receiver >

Rev_0.4

LGE Internal Use Only

LG Electronics	
TITLE	Schematic1
SIZE A2	DWG NO PDM NUMBER
REV Rev	
DRAWN BY User Name	SHEET 6-6_SPK_REV_MIC_EARJACK
Drawing Date	

5.5" Incell LCD Connector

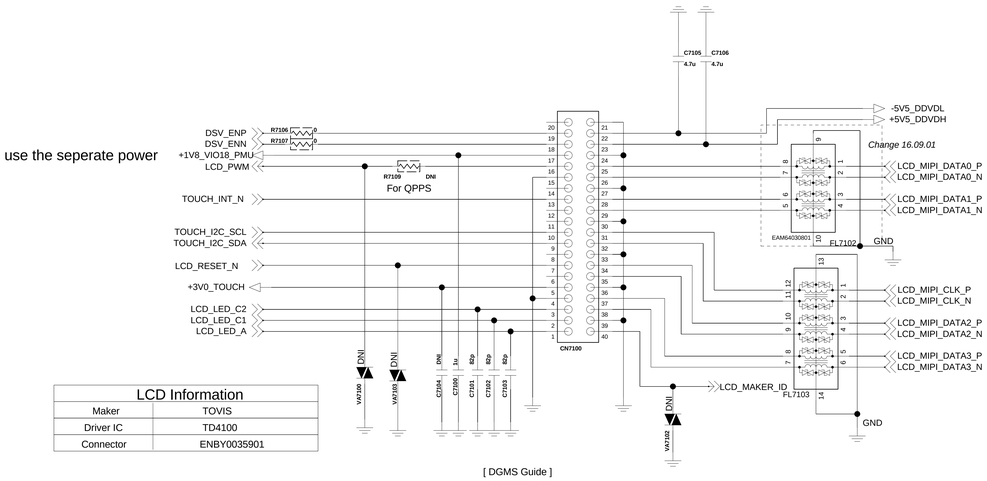

LCD Information	
Maker	TOVIS
Driver IC	TD4100
Connector	ENBY0035901

[DGMS Guide]
MC-C00057-16
1 - Components for ESD Protection should be located nearby at LCD Data, Control and Power line.
2- Basically, DNI_PAD for ESD Protection components should be used.
2- LCD RESET should be allocated with dedicated GPIO for the purpose of Reset function.

TOUCH LDO
DNI

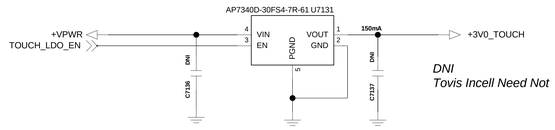

LCD LDO

deleted 0921

1. LCD_Backlight_Flash_DSV_DW8767
Changed 10/31

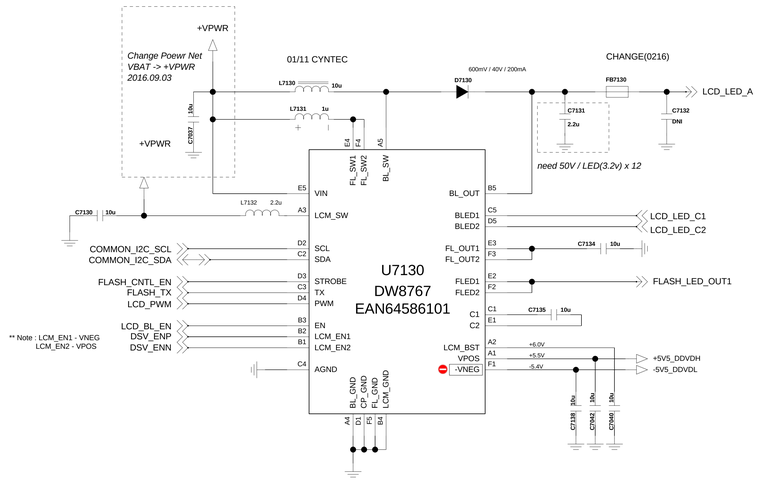

<Main_Flash_LED> <Front_Flash_LED>

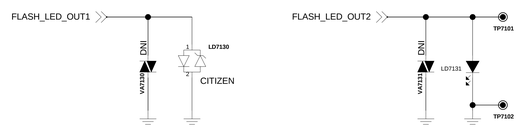

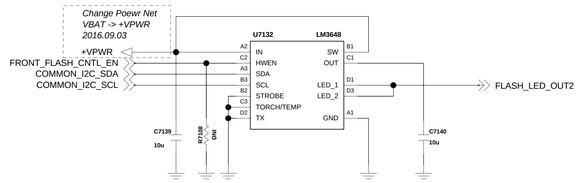

LG Electronics

TITLE: Schematic1

SIZE	DWG NO	REV
A2	PDM NUMBER	Rev

DRAWN BY: User Name | SHEET: 7-1_Standard_TOUCH_LCD | Drawing Date

LGE Internal Use Only

<7-3-5-1_30pin_5M_8M_13M_AF> Rev_0.3

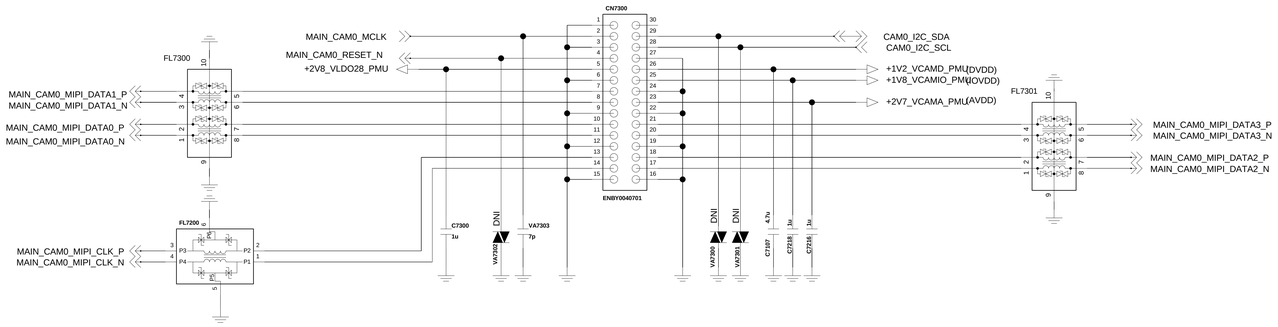

< 7-4-x_Front_Camera_30pin_8M_FF>

[DGMS Guide]

MC-C00081-17: 1. Add ESD Protection curcuit for Camera signal lines

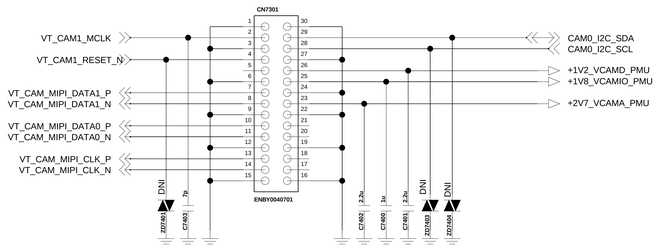

LGE Internal Use Only

	LG Electronics
TITLE	Schematic1
SIZE A2	DWG NO PDM NUMBER REV Rev
DRAWN BY User Name	SHEET 7-2_Standard CAMERA_1 Drawing Date

< PWR KEY_VOL KEY>

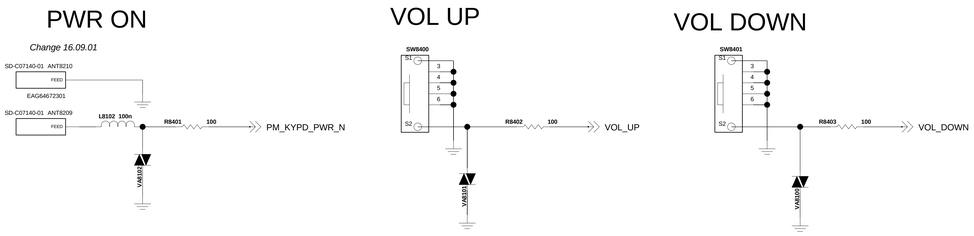

< 9-9-1-1_MOTOR >

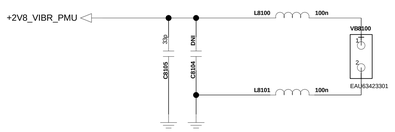

< 8-7-1-5_Hall_IC_S5717 > Rev_1.1

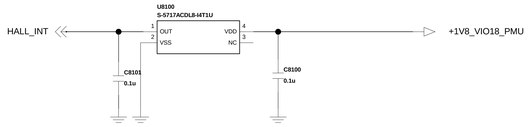

(DGMS Guide)
MC-C00058-12
Adjust the bypass capacitor value as necessary, according to signal line noise conditions

< 8-4-3-4_Proximity_APDS-9930-130 >

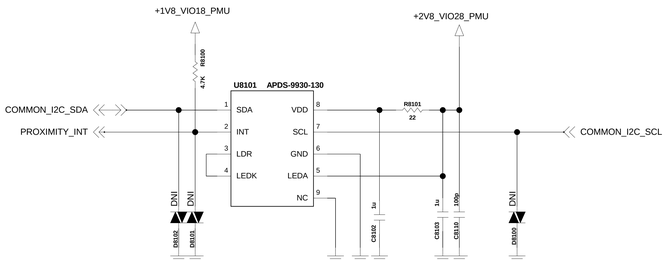

<8-1-2-1_Accel_Gyro_BMI120>

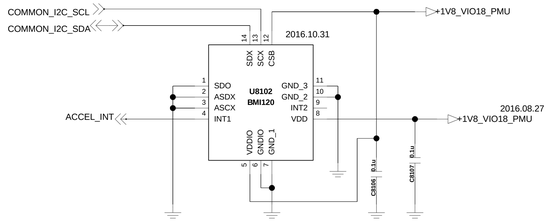

< Geomagnetic_AK09916C >

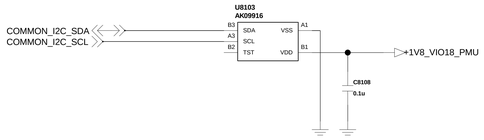

Shield CAN / C-Clip

MT6750/MCP Shield Can clip_8ea(BOT1)

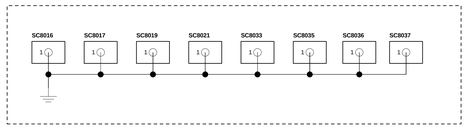

BOT SMT Shield Can

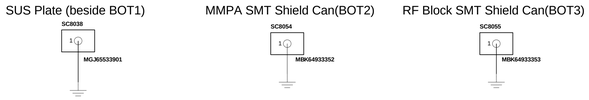

TOP SMT Shield Can

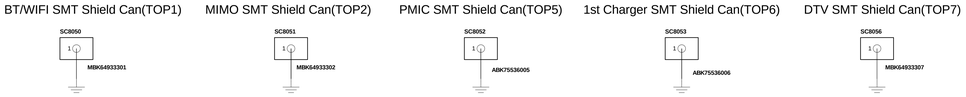

PID 6x6

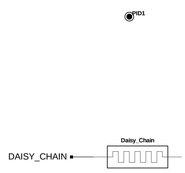

Add 16.09.03

SMT Gasket

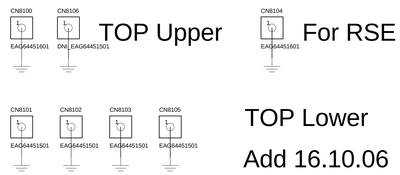

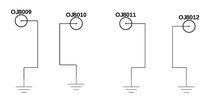

LGE Internal Use Only

LG Electronics	
TITLE	Schematic1
SIZE A2	DWG NO PDM NUMBER
REV Rev	
DRAWN BY User Name	SHEET 8_Sensor_VIB_KEY_ShieldCAN and
Date	

Circuit 4. Batt Conn. /w Embedded Batt

<9-1_Battery_Connector_4Pin>_0913

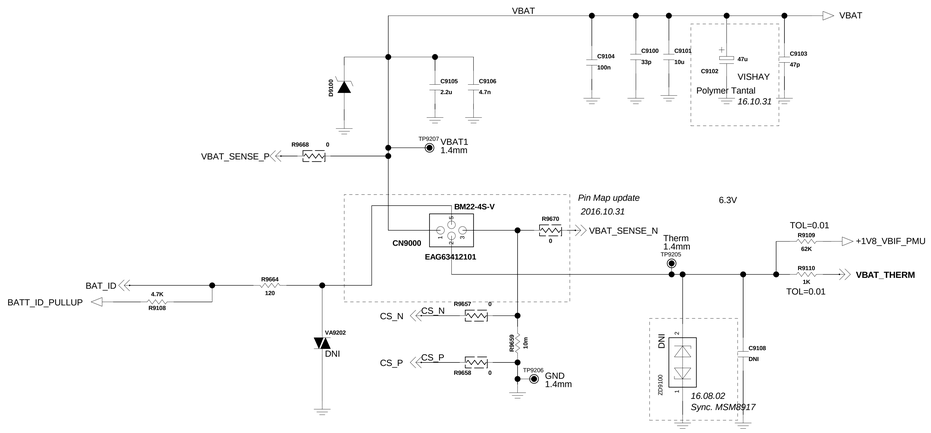

< 9-6_u_SDCARD_Socket > Rev.1.1

1st SIM & SD Card

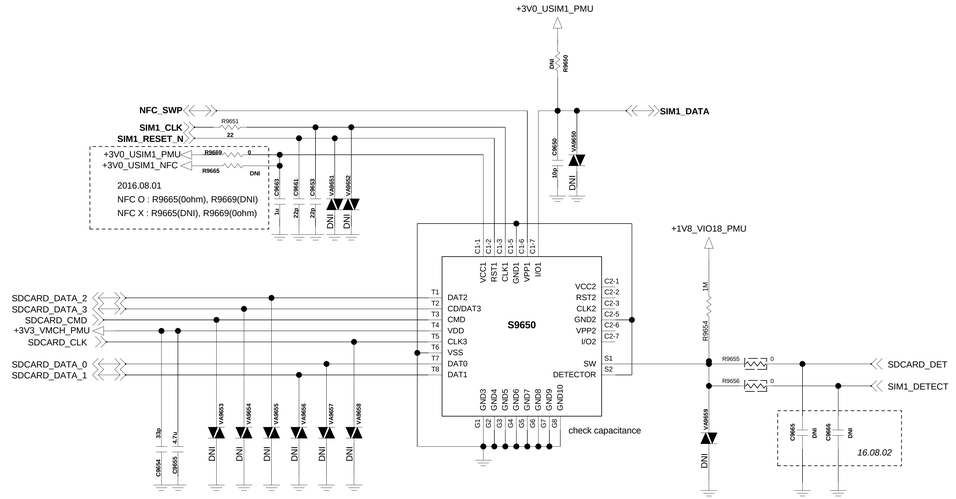

(DGMS Guide)
MC-C04581-13 : Below items should be satisfied
1. SIM_DATA pull-up resistor
2. Use under 33pF (Cap_Varistor) on each signal line
3. When routing, SIM_DATA, SIM_CLK should be seperated
4. CAP,Varistor should Place close to connector

(DGMS Guide)
MC-C04582-14 : Below items should be satisfied
1. SD_DETECT Pull-up or Pull-down
2. Data/CMD line should be needed Pull-up resistor
(If chipset has internal Pull-up, comment it on circuit)
3. Use under total 10pF Capacitance on each line ; Data [0:3], CMD - Cap. TVS diode, varistor
(on other line, We recommend 10pF capacitance and use under 30pF capacitance)
4. CAP,Varistor should Place close to connector

(DGMS Guide)
MC-C05446-7 : Below items should be satisfied
1. Power of SD card should use independant Power source just like LDO/PMIC which can turn off it.
2. Per chip type which support SD card should manage current capacity.
(In case of High speed mode, SD Card Power should get margin of 200mA)
3. Do not connect serial component to SD card power, voltage drop can arise at Power line.

<9-2-1_USB_IO> Rev.1.0

Connector 1. USB 2.0

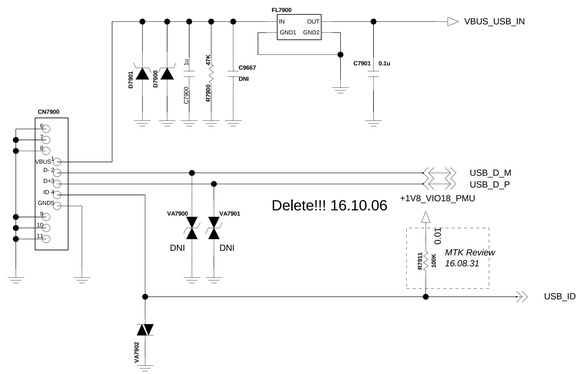

<4-3-3_OVP_RT9718> Rev.0.3

Delete!!! 16.09.03

FACTORY TP
Delete 16.08.30

NanoSIM Socket (2nd SIM)

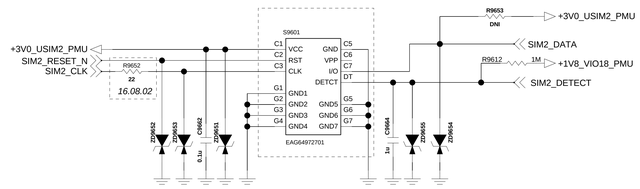

LG Electronics

TITLE: Schematic1

SIZE	DWG NO	REV
A2	PDM NUMBER	Rev

DRAWN BY: User Name | SHEET: 9-1 Soket_Battery_IO | Date: Drawing Date

LGE Internal Use Only

U2000_MT6750_IC,Digital Baseband Processor(Top View)

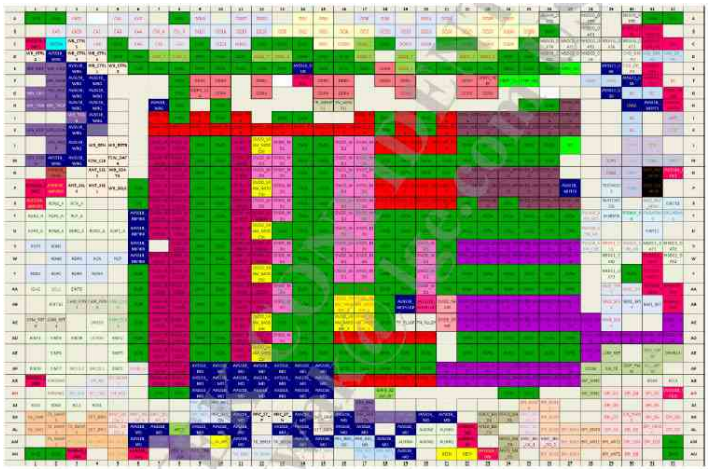

U3300_KMQX10013M-B419_IC, MCP EMMC (Top View)

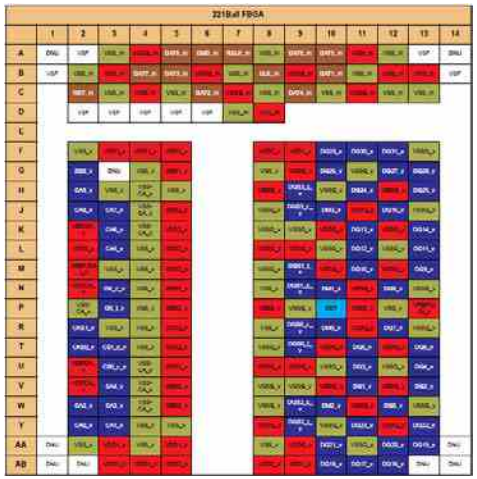

U4100_MT6353_IC,PMIC (Top View)

	1	2	3	4	5	6	7	8	9	10	11	12	13	14	15	16	17
A	VPA	GND_VPA		VBAT_VPROC	GND_VPROC	VPROC	VPROC	VCORE2		VBAT_VCORE		VCORE	VS1	VBAT_VS1		AVDD20_LDO5	AVDD20_LDO3
B	VBAT_VPA	GND_VPROC_FB	VBAT_VPROC	VBAT_VPROC	GND_VPROC	GND_VPROC	VPROC	VCORE2	VBAT_VCORE2	VBAT_VCORE	GND_VCORE	VCORE	VS1	VBAT_VS1	VRF18	VRF18	VIO18
C		VPROC_FB	VCORE2_FB	VBAT_VPROC	GND_VPROC	GND_VPROC	VPROC	VCORE2	VBAT_VCORE2	GND_VCORE2	GND_VCORE	VCORE	GND_VS1	VRF12	VCN18	VIO18	AVDD20_LDO2
D	SPK_N		GND_VCORE2_FB	VPA_FB	GND_SMPS	GND_LDO	VPROC	GND_LDO	GND_VCORE2	GND_VCORE2	GND_VCORE	GND_LDO	GND_VS1	GND_LDO	VCAMIO		VDRAM
E	SPK_P	GND_ISINK	ISINK0	ISINK1	VBAT_SMPS	GND_LDO	GND_LDO	GND_LDO	GND_LDO	GND_LDO	GND_LDO	GND_LDO	GND_LDO	GND_LDO	VCAMD	AVDD20_LDO4	VSRAM_PROC
F	VBAT_SPK	AU_FLYN	GND_SPK		VBAT_LDO6	GND_LDO	GND_LDO	GND_LDO	GND_LDO	GND_LDO	GND_LDO	GND_LDO	GND_LDO	GND_LDO	AVDD20_LDO1	VCORE_FB	GND_VCORE_FB	VMCH
G		AU_FLYP	AVSS18N_AUD			GND_LDO	GND_LDO	GND_LDO	GND_LDO	GND_LDO	GND_LDO	GND_LDO	GND_LDO	GND_LDO	VMC	VS1_FB	VBAT_LDO5
H	HPR	HPL	AVSS18_AUD	AVDD18_AUD		GND_LDO	GND_LDO	GND_LDO	GND_LDO	GND_LDO	GND_LDO	GND_LDO	GND_LDO	GND_LDO	GND_LDO	VSIM1	VSIM2	VBAT_LDO4
J	AVSS28_AUD	HSN	AU_REFN		CLK26M	GND_LDO	GND_LDO	GND_LDO	GND_LDO	GND_LDO	GND_LDO	GND_LDO	GND_LDO	GND_LDO	GND_LDO	GND_LDO	VIBR
K		HSP		AU_VINL_P	AVDD28_AUD						GND_LDO	GND_LDO	GND_LDO	GND_LDO	VLDO28	VIO28	VBAT_LDO3
L		AU_VINZ_P	AU_VINR_P	AU_VINL_N		VDRV	VAUD28	AUD_CLK	DCXO32K_EN	VRTC28	RTC32K_LV8_1	SPI_CLK	DVDD18_DIG			XO_WCN	VEMC33
M	AU_MICBIAS0	AU_VINZ_N	AU_VINR_N		UVLO_VTH	VCAMA	AUD_DAT_MOSI	AUD_DAT_MISO	SPI_MISO	WDTRSTB_IN	DVDD18_IO	DVSS18_IO			EXT_PMIC_EN	XO_CEL	
N	AU_MICBIAS1	ACCDET		CHRLDO	CS_P	RESETB	TREF		XMODE	SPI_CSN		TYPEC_CC1				XO_NFC	XO_SOC
P		FCHR_ENB	PCHR_LED	VCDT	CS_N		VCN28		SPI_MOSI			AVSS18_AUXADC	TYPEC_CC2	VTOX024	VX022	AVSS22_XO	AVSS22_XOBUF
R	BATSNS	VSYSSNS	CHG_DP	CHG_DM	PMU_TESTMODE	VBAT_LDO1	VTOX028	RTC32K_2V8	XIN	GND_RTC	SRCLKEN_IN1	AVDD18_AUXADC	AUXADC_VIN	VCN33			XTAL1
T	ISENSE	BATON	VREF	GND_VREF	PWRKEY			VAUX18	XOUT		RTC32K_LV8_0		SRCLKEN_IN0	VUSB33	VBAT_LDO2	PSOURCE	XTAL2

U15000_MT6176_IC,RF Transceiver,4G (Top View)

Copyright © 2017 LG Electronics. Inc. All right reserved. Only training and service purposes

U4702_SM5424, IC Charger (Top View)	U6610_TPA2015D1, IC, Speaker AMP (Top View)
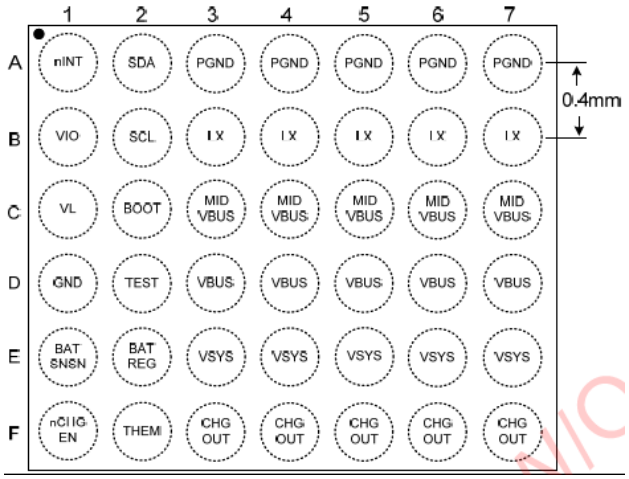	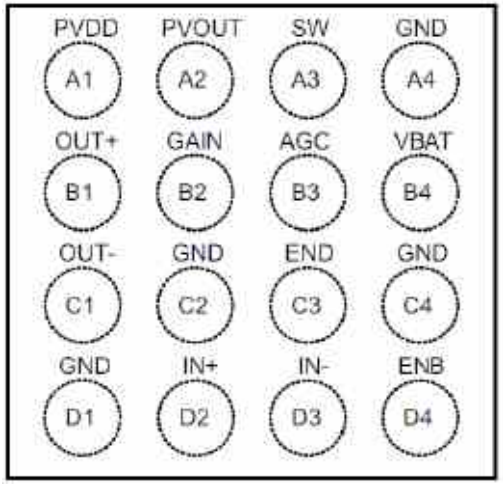

Copyright © 2017 LG Electronics. Inc. All right reserved. Only training and service purposes